ENGINE, CYLINDER AND PISTON - Z26SPD92AN/AH/BN/BH (C750273)

2026 RZR - RZR PRO S ULTIMATE (R01) - Z26SPD92AN/AH/BN/BH

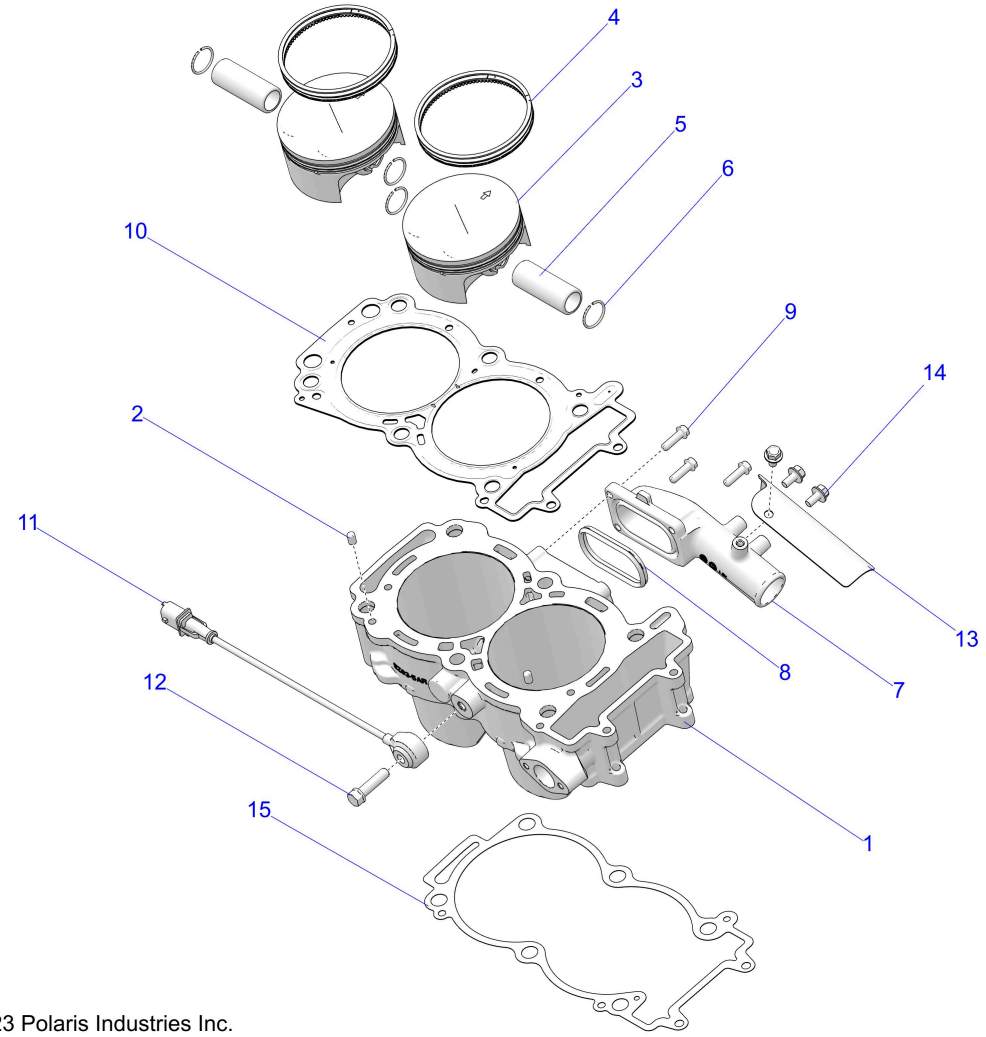

© 2023 Polaris Industries Inc.

C750273

Reference #	*Part#*	*Description*	*Quantity*
1	3023035	ASM., CYLINDER [INCL. 2][TO 9/18/2025]	1
1	3024513	ASM-CYLINDER [INCL. 2][FROM 9/18/2025]	1
2	5132835	PIN-DOWEL,M6X10	2
3	2206216	ASM., PISTON [INCL. 4-6]	2
4	2206217	KIT, PISTON RINGS [INCL. SET FOR 1 PISTON]	2
5	3022291	PIN-PISTON,22X12.8X56.6MM	2
6	7710479	RING-RTNG,RND,22.0X1.6,0600102	4
7	5141311	COVER-WATER INLET,MACH	1
8	5813736	GASKET-WATER,INLET	1
9	7518576	SCREW-HXFL-M6X1.0X20 8.8 ZY3	3
10	5814693	GASKET-CYL HEAD 4-LAYER	1
11	2410369	SENSOR-DETONATION BOSCH	1
12	7517262	SCREW-M8X1.25X30,HX/FL-YD	1
13	5265306	SHIELD-HEAT BOLTED,COOLANT	1
14	7520710	SCR-HXFL-M6X1.0X12 8.8	3
15	5272970	GASKET-BASE,2 CYL	1

Copyright 1996-2026 Polaris Industries U.S.A All rights reserved.